aiwa SERVICE

RM-P300W AU(S)

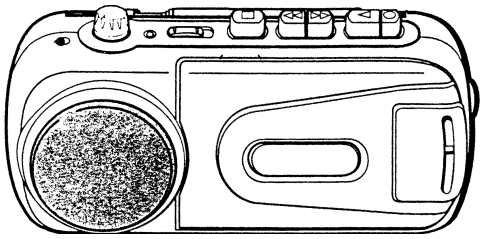

SERVICE MANUAL

RADIO CASSETTE RECEIVER BASIC TAPE MECHANISM : TN-9ZR-215

• This Service Manual is the “Revision Publishing” and replaces “Simple Manual” (S/M Code No. 09-003-340-6T1).

SPECIFICATIONS

Tuner section
Frequency range, antenna — FM: 87.5 - 108.0 MHz
Rod antenna, AM: 530 - 1,710 kHz Ferrite bar antenna

Deck section
Track format — 2 tracks, 1 channel / Frequency range — Normal tape: 50 - 8,000 Hz (EIAJ) / Recording system — AC bias / Erasing system — Magnet erase / Heads — Recording/playback head (1), Erasure head (1)

General
Speaker — 58 mm cone type (1) / Output — Earphone jack (monaural mini-jack) / Power output — 0.5 W (EIAJ 8 ohms, T.H.D. 10%) / Power requirements — DC 6 V using four size AA (R6P) batteries, Domestic AC power using the supplied AC adaptor / Dimensions — 206 (W) × 91.6 (H) × 55 (D) mm ($8\,^1/_8 \times 3\,^5/_8 \times 2\,^1/_4$ in.) (excluding projecting parts and controls) / Weight — 450 g (1 lb.) (excluding batteries)
<AC adaptor AC-D602 U>
Rated input — AC 120V, 60 Hz / Rated output — DC 6 V, 500 mA

• Design and specifications are subject to change without notice.

aiwa

S/M Code No. 09-003-340-6R1

REVISION DATA

ELECTRICAL MAIN PARTS LIST

DESCRIPTIONで判断できない物は "REFERENCE NAME LIST" を参照してください。
If can't understand for Description please kinly refer to "REFERENCE NAME LIST".

REF. NO	PART NO.	KANRI NO.	DESCRIPTION
IC			
	8Z-CM2-646-010		IC,TA2132
	88-CM2-608-010		IC,TA7628 HP
	88-CS7-613-010		IC,KA2402
TRANSISTOR			
	87-CD7-603-080		TR,SS8050
DIODE			
	87-070-345-080		DIODE,IN4148
	87-A40-574-080		ZENER,MTZJ3.0A
	88-CD6-665-010		DIODE,IN60P
	86-CM3-601-080		DIODE,CDG-24
	87-A40-375-010		ZENER,HZ5BLL
MAIN C.B			
C101	87-010-404-080		CAP, ELECT 4.7-50V
C102	87-010-380-080		CAP, ELECT 47-16V
C104	87-010-405-080		CAP, ELECT 10-50V
C107	87-A10-578-080		CAP,CER 0.047-50 Z YF
C109	87-010-248-080		CAP, ELECT 220-10V
C114	87-A10-173-010		CAP,CER 560P-50 K B
C115	87-010-405-080		CAP, ELECT 10-50V
C116	87-010-404-080		CAP, ELECT 4.7-50V
C117	87-010-401-080		CAP, ELECT 1-50V
C118	87-010-382-080		CAP, ELECT 22-25V
C119	87-010-380-080		CAP, ELECT 47-16V
C122	87-A10-173-010		CAP,CER 560P-50 K B
C123	87-A10-173-010		CAP,CER 560P-50 K B
C204	87-A10-496-010		CAP,CER 18P-50 J CH
C206	87-A10-134-010		CAP,CER 8P-50 K CH
C207	87-010-498-040		CAP,E 10-16 GAS
C208	87-A10-414-010		CAP,CER 0.033-16 K SR
C210	87-010-400-080		CAP, ELECT 0.47-50V
C211	87-A10-496-010		CAP,CER 18P-50 J CH
C212	87-010-551-040		CAP, ELECT 33-10 GAS
C213	87-A10-414-010		CAP,CER 0.033-16 K SR
C226	87-010-196-080		CHIP CAPACITOR 0.1-25
C231	87-010-248-080		CAP, ELECT 220-10V
C232	87-A10-577-080		CAP,CER 0.022-50 Z YF
C301	87-A10-168-010		CAP,CER 220P-50 K B
C302	87-A10-173-010		CAP,CER 560P-50 K B
C303	87-010-402-080		CAP, ELECT 2.2-50V
C304	87-010-263-080		CAP, ELECT 100-10V
C305	87-010-248-080		CAP, ELECT 220-10V
C306	87-010-380-080		CAP, ELECT 47-16V
C308	87-010-221-080		CAP, ELECT 470-10V
C309	87-010-248-080		CAP, ELECT 220-10V
C310	87-010-221-080		CAP, ELECT 470-10V
C311	87-010-263-080		CAP, ELECT 100-10V
C312	87-010-380-080		CAP, ELECT 47-16V
C313	87-010-401-080		CAP, ELECT 1-50V
C314	87-A10-578-080		CAP,CER 0.047-50 Z YF
C315	87-010-400-080		CAP, ELECT 0.47-50V
C322	87-A10-128-010		CAP,CER 2P-50 K CH
C323	87-010-196-080		CHIP CAPACITOR, 0.1-25
CF201	88-CS8-631-010		FILTER, SFE10.7MS2-A
CF202	87-008-582-010		FLTR,SFU455B
CF203	88-CS8-631-010		FILTER, SFE10.7MS2-A
D302	88-CS8-644-010		LED,SE-3001DT,3MM BRIGHT ,REDL
J1	88-CS7-618-010		JACK,DC 6
J2	88-CL5-608-010		JACK,3.6 S W/SW
L201	88-CS8-610-010		COIL,BAR ANTCOIL ASSY A192674W
L202	8Z-CM3-611-010		COIL,FM RF 6.5T-2.5 DIA 0.5
L203	8Z-CM3-612-010		COIL,FM OSC 2.5T-5 DIA 0.8
L204	88-CS8-611-010		COIL,FM ANT 4.5-4T
L205	88-CS8-630-010		COIL,FM 9T,3MM,DIA:0.4MM CS34-
L206	87-005-151-080		COIL,2.2UH
PVC1	87-A90-913-010		TUN-CAP,20P-140P 16*16
SW2	88-CM2-604-010		SW,2P-6T (R/P)
T201	8Z-CM3-610-010		COIL,FM IFT-1411
T202	8Z-CM3-613-010		COIL,AM OSC1497
T202	88-CM2-601-010		COIL,FM DET1529
T306	88-CS8-628-010		COIL,OSC IFT 4A-363R(B) 10MM
VR301	8Z-CM1-603-010		VR,RTRY 50K A MAIN
VR302	87-A90-309-010		SFR,2K H 6.3

- Regarding connectors, they are not stocked as they are not the initial order items.
  The connectors are available after they are supplied from connector manufacturers upon the order is received.

Oチップ抵抗部品コード／CHIP RESISTOR PART CODE

チップ抵抗部品コードの成り立ち
Chip Resistor Part Coding

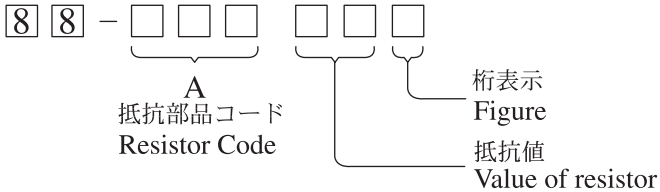

チップ抵抗
Chip resistor

容量 Wattage	種類 Type	許容誤差 Tolerance	記号 Symbol	寸法／Dimensions (mm) 外形／Form	L	W	t	抵抗コード : A Resistor Code : A
1/16W	1005	± 5%	CJ	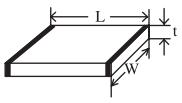	1.0	0.5	0.35	104
1/16W	1608	± 5%	CJ		1.6	0.8	0.45	108
1/10W	2125	± 5%	CJ		2	1.25	0.45	118
1/8W	3216	± 5%	CJ		3.2	1.6	0.55	128

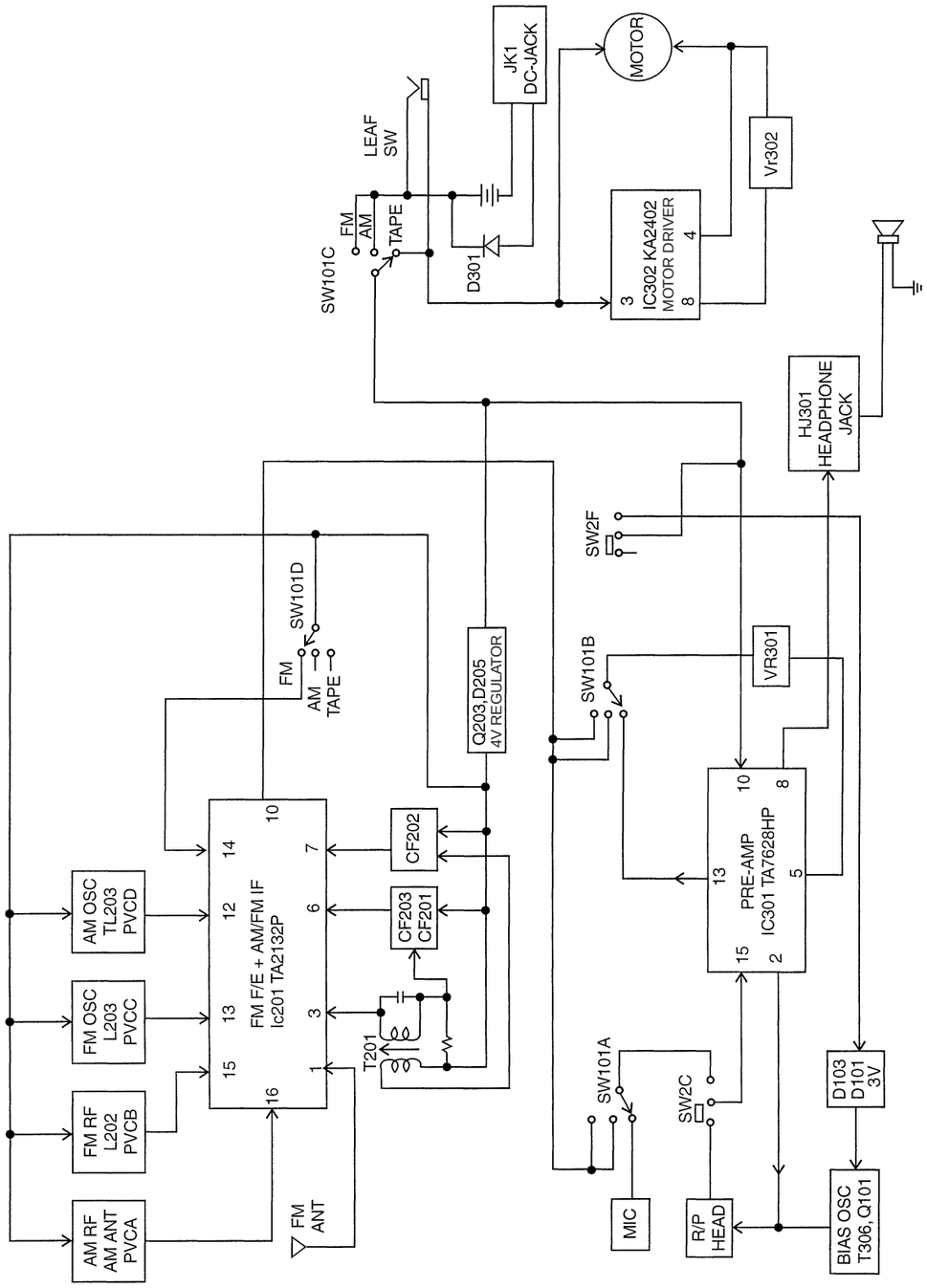

TUNER SECTION
TEST CONDITION: SET TUNER ON AM/FM ONE FREQUENCY

IC201 (TA2132AP)

PIN'S NUMBER	1	2	3	4	5	6	7	8
AM	0	0	2.99	0.43	2.99	2.99	2.30	0
FM	0.77	0	2.97	1.50	2.97	2.98	2.79	0
PIN'S NUMBER	9	10	11	12	13	14	15	16
AM	2.74	1.09	1.06	2.99	2.99	2.33	2.99	2.99
FM	2.18	0.84	1.13	2.98	2.97	2.33	2.97	2.98

TRANSISTOR	Q203 (8050)		
	E	C	B
FM	0.09	2.07	0.83

CASSETTE SECTION
TEST CONDITION: TAPE PLAY

IC301 (TA7628HP)

PIN'S NUMBER	1	2	3	4	5	6	7	8
PLAY	0	0	0	0	0.01	0.60	0	3.14
REC	0	2.76	0.79	0	0.01	0.61	0	3.02
PIN'S NUMBER	9	10	11	12	13	14	15	16
PLAY	6.12	6.47	6.42	5.47	1.49	1.39	1.39	0
REC	5.91	6.22	6.15	5.23	1.41	1.40	1.40	0

IC302 (KA2402)

PIN'S NUMBER	1	2	3	4	5	6	7	8
PLAY	/	/	5.59	3.91	0	5.05	/	4.91

TRANSISTOR	Q203 (8050)		
	E	C	B
TAPE	2.93	6.42	3.55
RADIO	2.99	6.91	3.63

SCHEMATIC DIAGRAM

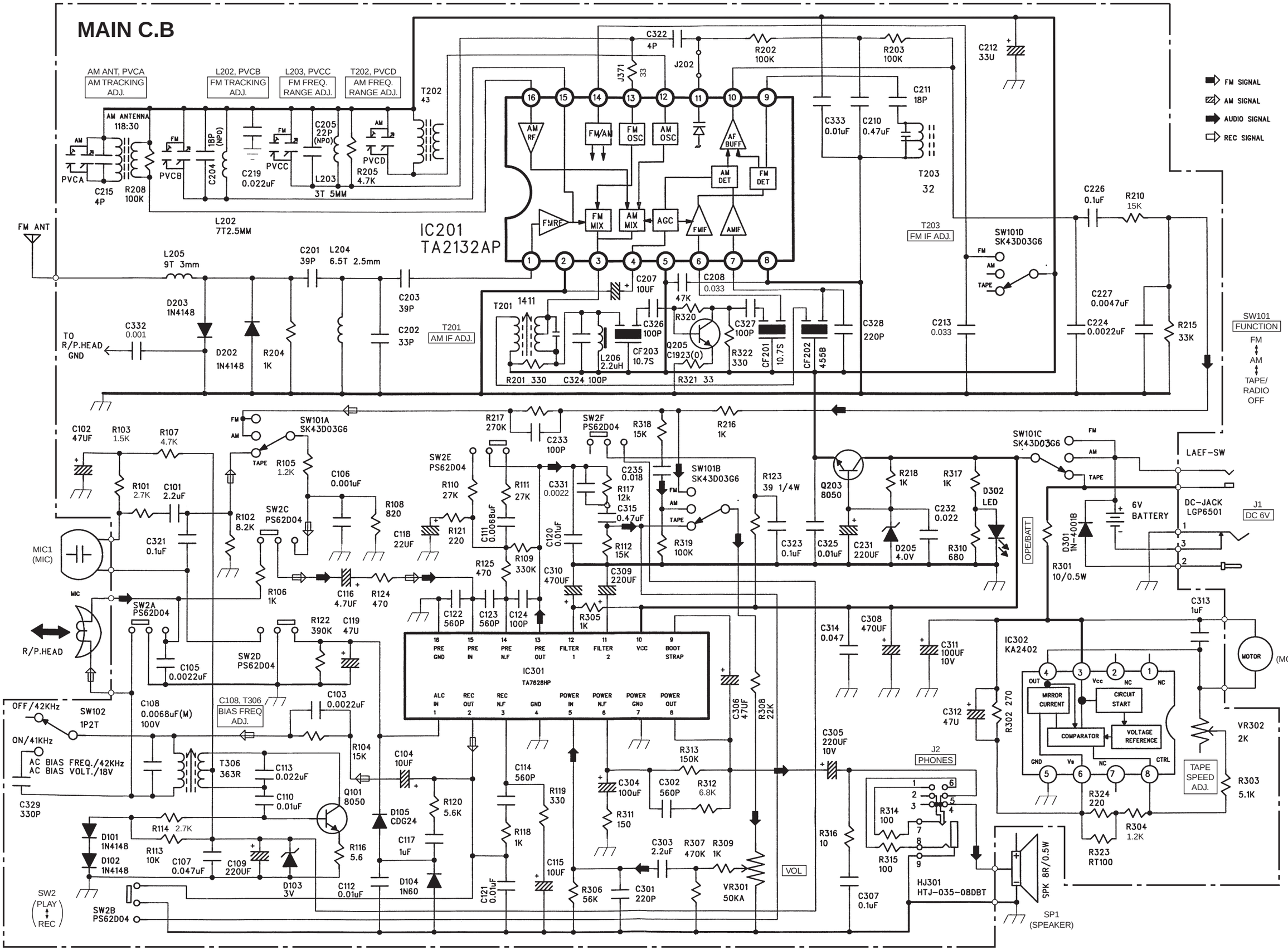

MAIN C.B (INSERTED PARTS)

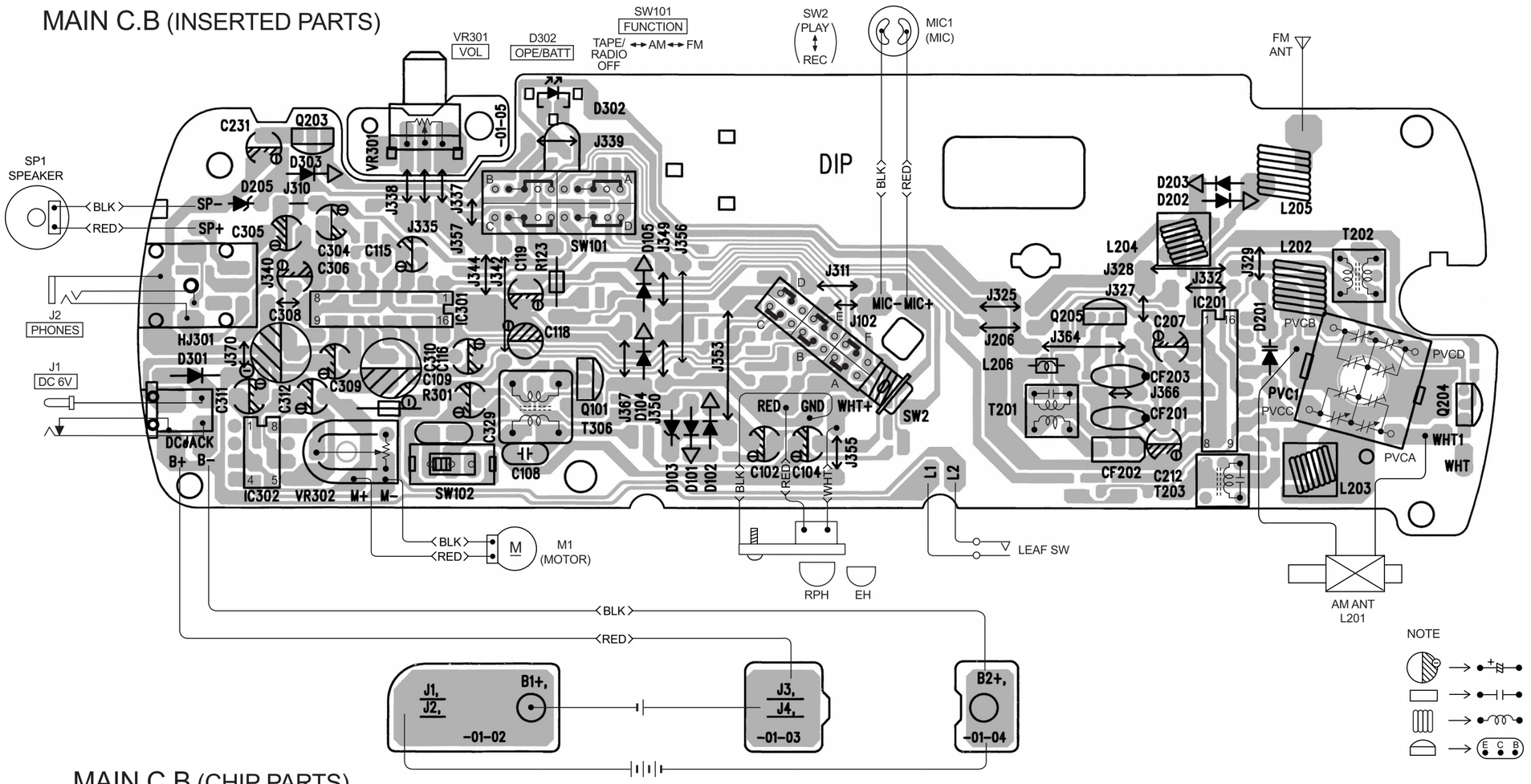

MAIN C.B (CHIP PARTS)

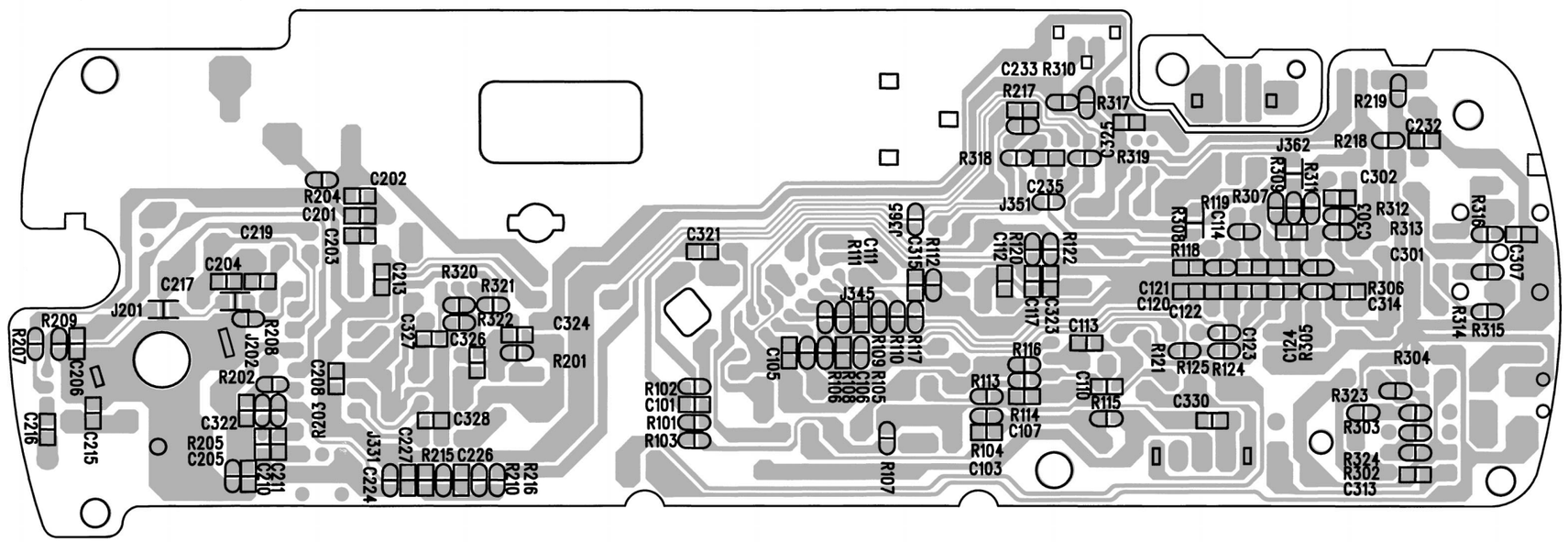

TRANSISTOR ILLUSTRATION

2SC1923
SS8050

IC BLOCK DIAGRAM

IC, TA7628HP

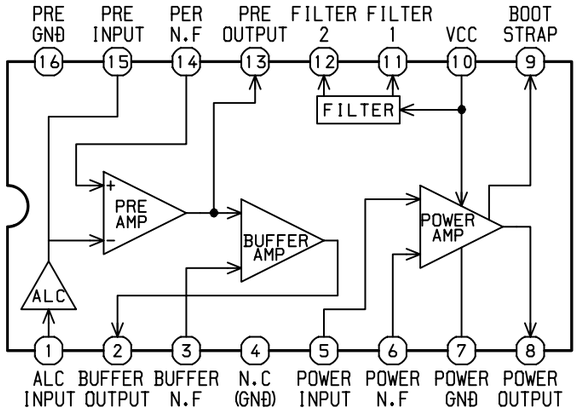

ELECTRICAL ADJUSTMENT

1. SET-UP PROCEDURES

TUNER SECTION

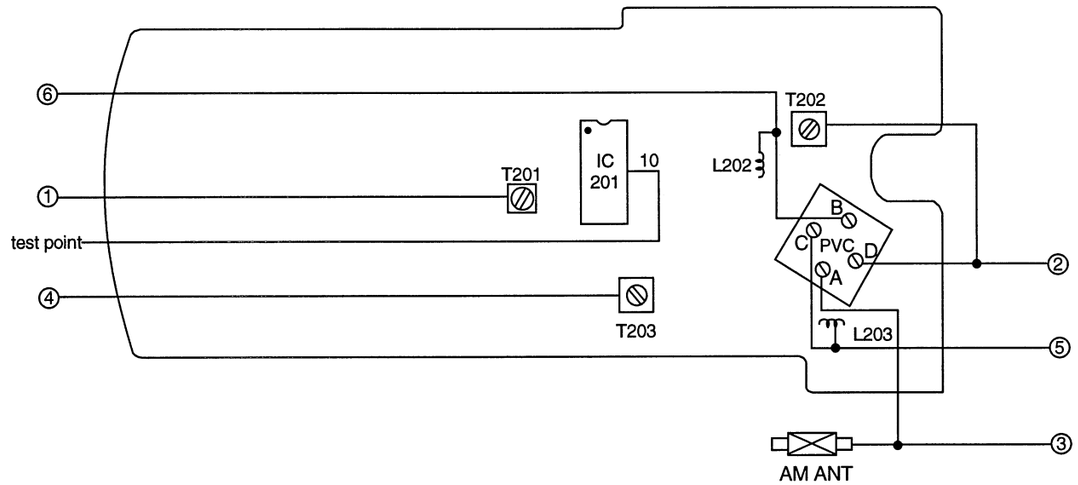

1. AM IF Adjustment
   Test point: IC201 (TA2132P) 10 PIN
   Adjustment Location: T201
   T201 ---------- 455 kHz

2. AM Freauency Range Adjustment
   Test point: IC201 (TA2132P) 10 PIN
   Adjustment Location: T202, PVCD
   T201 ---------- 517 kHz (D,U,LH Version)
   515 kHz (EZ,K,HR,HC Version)
   PVCD ---------- 1650 kHz (K,HC Version)
   1635 kHz (EZ,K,HR Version)
   1750 kHz (U,LH Version)

3. AM Tracking Adjustment
   Test point: IC201 (TA2132P) 10 PIN
   Adjustment Location: AM ANT.PVCA
   AM ANT ---------- 600 kHz waveform max.

4. FM IF Adjustment
   Test point: IC201 (TA2132P) 10 PIN
   Adjustment Location: T203
   T203 ---------- 10.7 MHz

5. FM Freauency Range Adjustment
   Test point: IC201 (TA2132P) 10 PIN
   Adjustment Location: L203, PVCC
   L203 ---------- 75 MHz (D Version)
   87 MHz (U,HR,LH,HC Version)
   87.3 MHz (EZ,K Version)
   PVCC ---------- 109 MHz (D,U,HR,LH,HC Version)
   108.4 MHz (EZ,K,Version)

6. FM Tracking Adjustment
   Test point: IC201 (TA2132P) 10 PIN
   Adjustment Location: L202, PVCB
   L202 ---------- 76 MHz (D Version)

CASSETTE SECTION

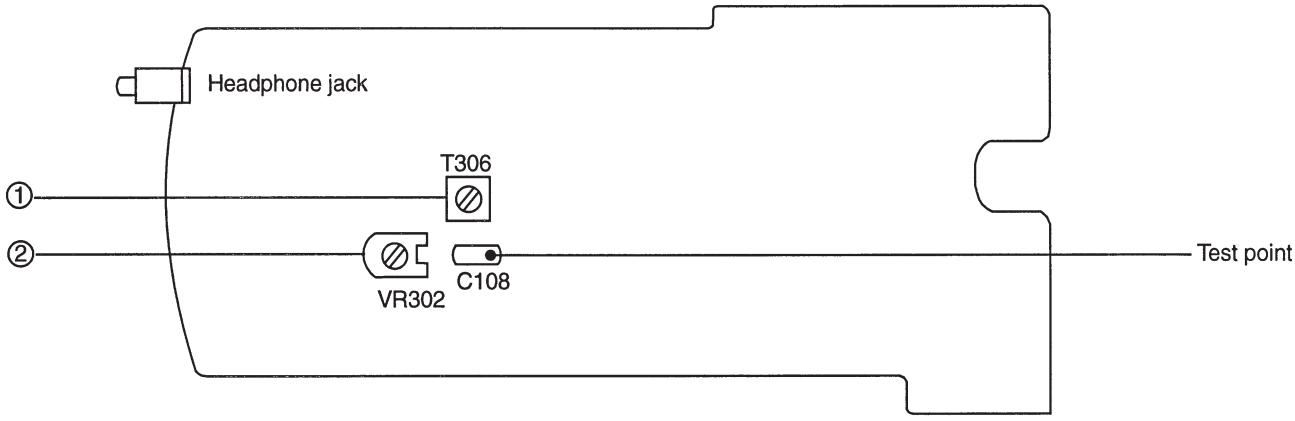

1. Bias Osc Adjustment
   Test point: C108
   Adjustment Location: T306
   T306 ---------- 60kHz ±5kHz

2. Tape Speed Adjustment
   Test point: Headphone jack
   Adjustment Location: VR302
   VR302 ---------- 3000 ±90/-60Hz

2. EQUIPMENT CONNECTION DIAGRAM

AM SECTION

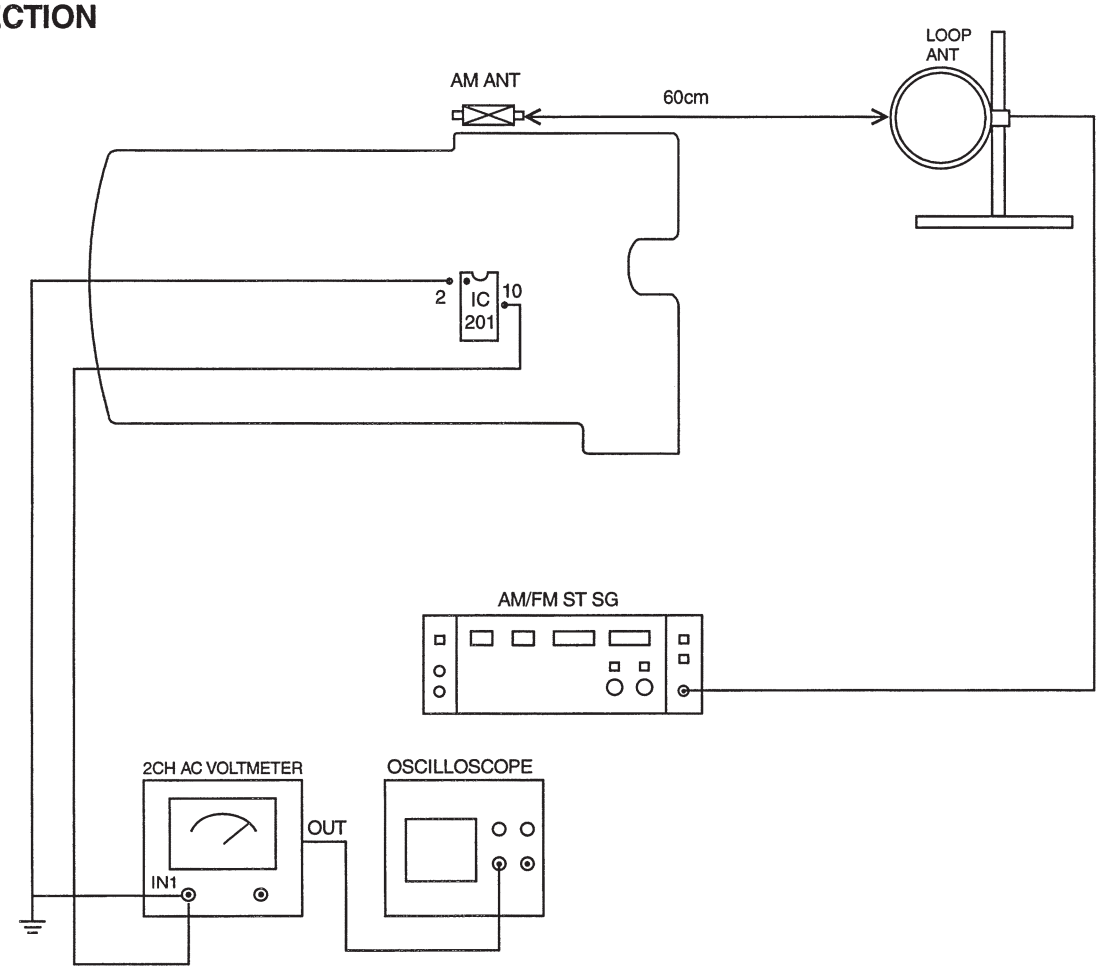

FM SECTION

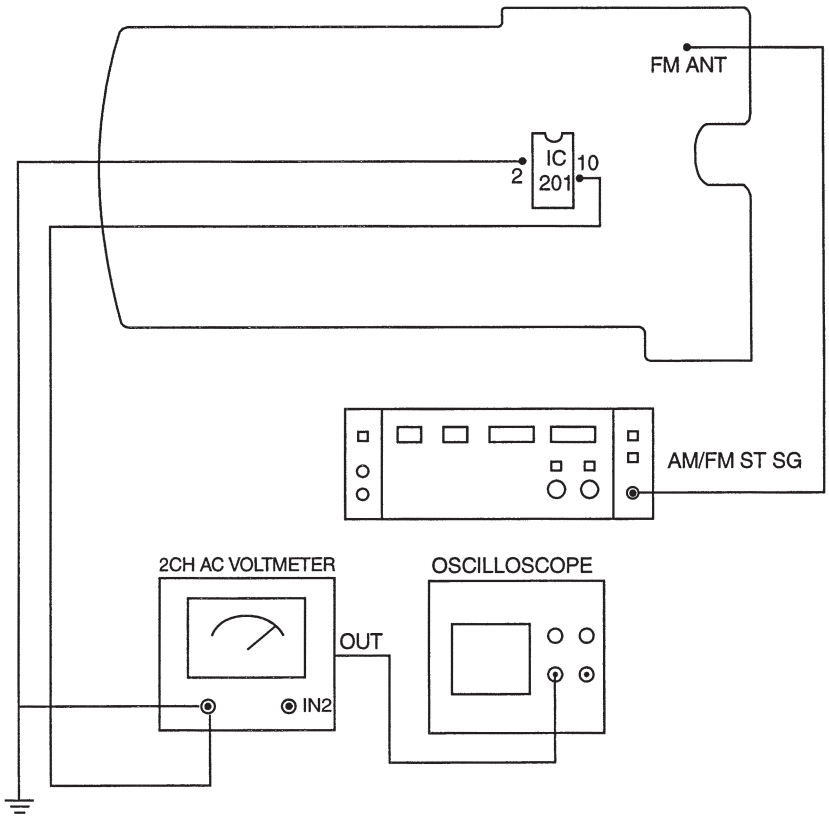

CASSETTE SECTION

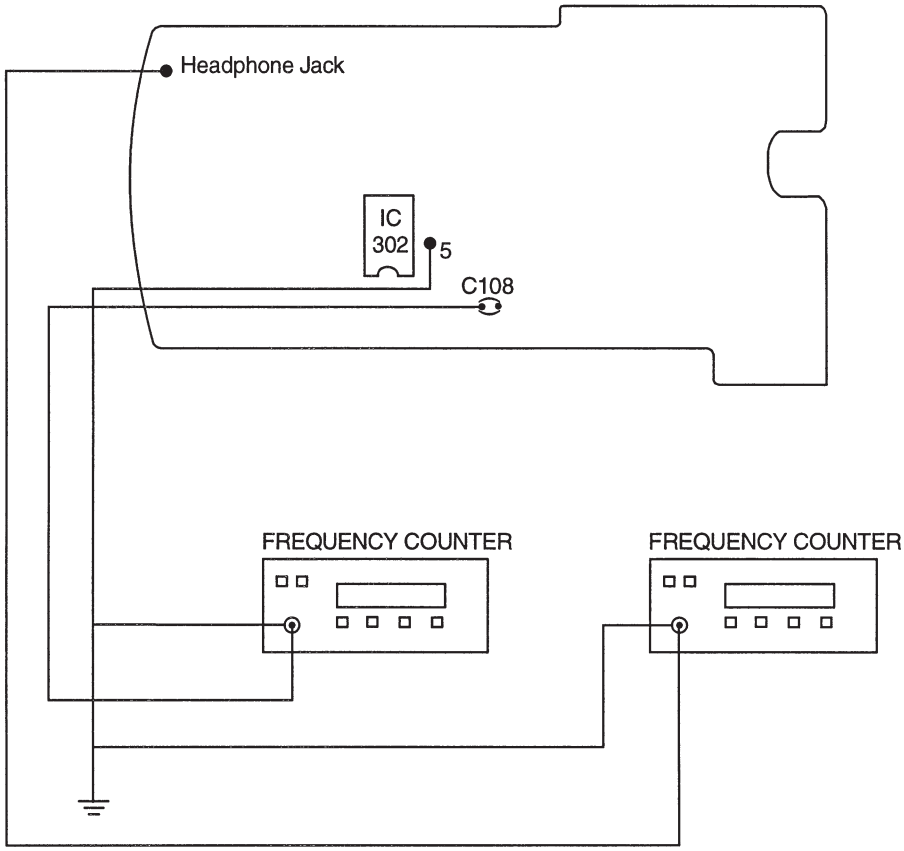

PRACTICAL SERVICE FIGURE

< TUNER SECTION >

< FM SECTION >

Quieting sensitivity: (THD 3%)	Less than 20dB (at 88.0MHz) Less than 19dB (at 98.0/108.0MHz)
Distortion:	Less than 2% (Input 60dB) (at 98.0MHz)
Intermediate frequency:	10.7MHz

< AM (MW) SECTION >

Sensitivity: (S/N 10dB)	Less than 51dB (at 600kHz) Less than 49dB (at 1000/1400kHz)
Signal to noise ratio:	More than 30dB (Input 74dB) (at 1000kHz)
Distortion:	Less than 3% (1000dB, 60% Mod) (at 1000kHz)
Intermediate frequency:	455kHz

< DECK SECTION >

Tape speed:	3000Hz+90Hz/-60Hz
Distortion:	Less than 3% (PB) Less than 7% (REC)
Wow & Flutter:	Less than 0.45%
Test tape:	TTA-100

MECHANICAL PARTS LIST 1/1

DESCRIPTIONで判断できない物は "REFERENCE NAME LIST" を参照してください。
If can't understand for Description please kinly refer to "REFERENCE NAME LIST".

REF. NO	PART NO.	KANRI NO.	DESCRIPTION
1	8A-CM3-016-010		WINDOW,CASS U
2	8A-CM3-003-010		LID,CASS
3	8A-CM3-021-010		CABI,FR ASSY EX
4	8A-CM3-013-010		POINTER,
5	8A-CM3-019-010		LENS,TOP EX
6	8A-CM3-010-010		KNOB,SL FUNCTION
7	8A-CM3-009-010		KNOB,RTRY VOL
8	8A-CM3-008-010		KNOB,RTRY TUNING
9	8A-CM3-211-010		SPR-P,CASS
10	88-CS8-625-010		MIC,ECM
11	86-CM3-605-010		SPKR, 0.5W 55M
12	8Z-CM3-211-010		SPR-P,DOOR CASS
13	86-CM3-213-010		SPR-P,REC
14	8A-CM3-201-010		SHAFT,REC
15	8A-CM3-202-010		LEVER,REC
16	8A-CM3-012-010		KEY,CASS REC
17	87-450-414-010		LUG TERMINAL PLATE, LB-4
18	8A-CM3-007-010		LID,BATT
19	8A-CM3-205-010		HLDR,PWB
20	8A-CM3-011-010		KEY,CASS SET
21	8A-CM3-203-010		HLDR,LED
22	8A-CM3-204-010		HLDR,KNOB FUNC
23	8A-CM3-209-010		HLDR,ANT
24	8A-CM3-207-010		GEAR,VC
25	8A-CM3-208-010		GEAR,MIDDLE
26	8A-CM3-206-010		CHAS,GEAR
27	88-CM2-211-010		SPR,BATT B(-)
28	8Z-CM3-203-010		BOX,BATTERY
29	88-CM2-210-010		SPR,BATT A(-)
30	8A-CM3-002-010		CABI,REAR
31	86-CM3-609-010		ANT,ROD 350MM
32	8A-CM3-006-010		HANDL,
A	87-267-527-310		SCREW, V+1.7-3
B	8Z-CM3-208-010		UT2+1.7-10 W/O
C	87-B10-114-010		VT2+2-12 CR
D	87-741-095-410		UT2+3-8 GLD
E	87-255-073-410		U+2.6-6
F	87-751-099-410		VT2+3-15 W/O SLOT
G	87-751-035-410		VT2+2-6W/0 SLOT

COLOR NAME TABLE

Basic color symbol	Color	Basic color symbol	Color	Basic color symbol	Color
B	Black	C	Cream	D	Orange
G	Green	H	Gray	L	Blue
LT	Transparent Blue	N	Gold	P	Pink
R	Red	S	Silver	ST	Titan Silver
T	Brown	V	Violet	W	White
WT	Transparent White	Y	Yellow	YT	Transparent Yellow
LM	Metallic Blue	LL	Light Blue	GT	Transparent Green
LD	Dark Blue	DT	Transparent Orange		

MECHANICAL EXPLODED VIEW 1/1

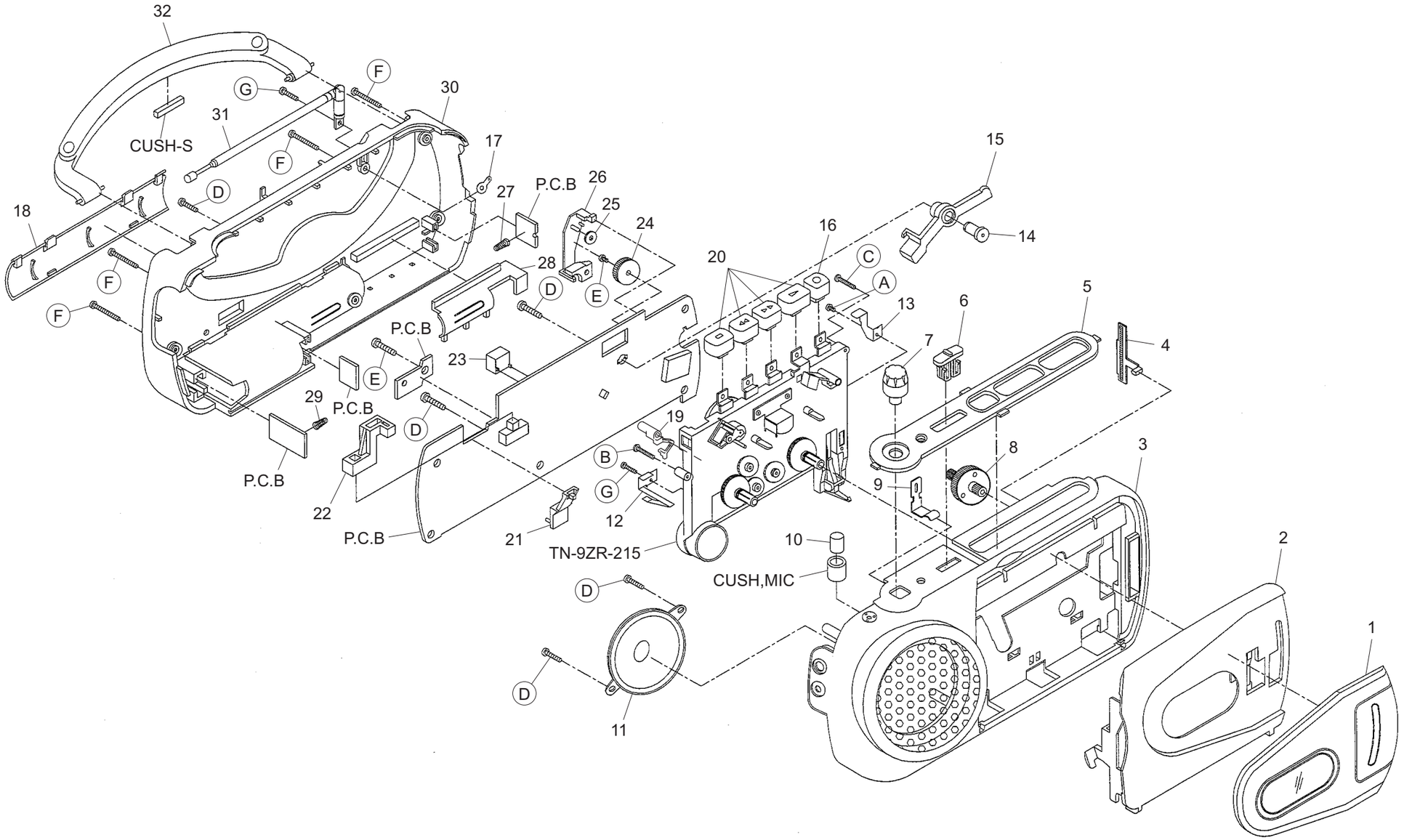

TAPE MECHANISM EXPLODED VIEW 1/1

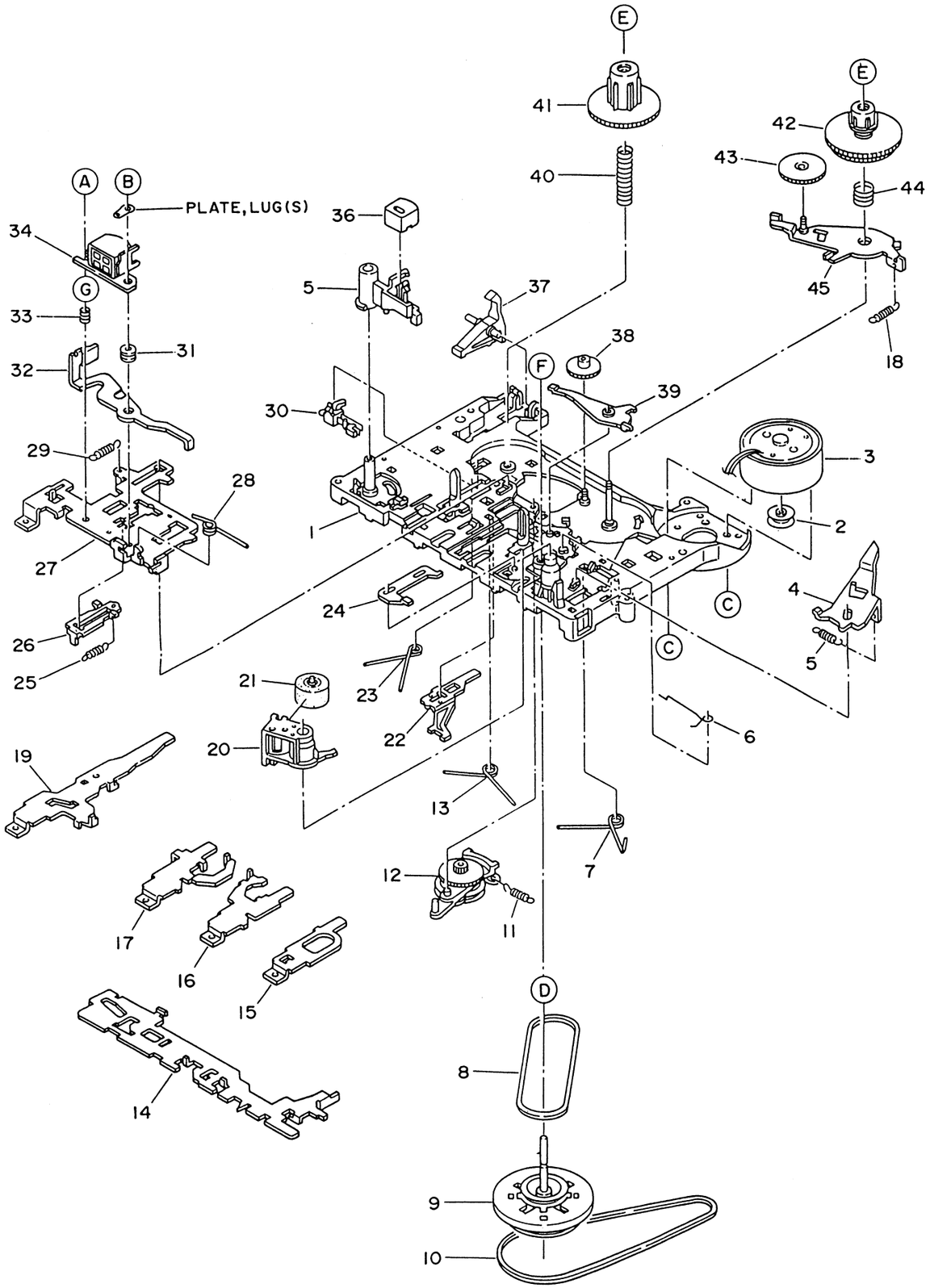

TAPE MECHANISM PARTS LIST 1/1

DESCRIPTIONで判断できない物は "REFERENCE NAME LIST" を参照してください。
If can't understand for Description please kinly refer to "REFERENCE NAME LIST".

REF. NO	PART NO.	KANRI NO.	DESCRIPTION
1	S1-877-013-120		CHASSIS ASSY
2	S1-877-120-010		MOTOR PULLEY
3	S6-002-070-100		MOTOR FR-410CA-12250T
4	S1-877-010-170		AUTO LEVER
5	S1-877-010-190		AUTO LEVER SPR
6	S1-877-030-090		SPR,EARTH
7	S1-877-010-370		SPR,LEVER BTN STOP
8	S1-867-050-040		BELT,RF
9	S1-877-093-050		FLYWHEEL ASSY
10	S1-877-090-070		BELT,MAIN
11	S1-877-070-060		SPR,ARM PULLEY RF
12	S1-877-073-030		RF PULLEY ARM ASSY
13	S1-877-010-110		FR BUTTON LEVER SPR
14	S1-877-010-260		BTN,ACTUATOR
15	S1-877-010-060		STOP BUTTON LEVER
16	S1-877-010-230		LEVER,BTN FF
17	S1-877-010-240		LEVER,BTN RWD
18	S1-877-010-320		SPR,PLATE T GEAR
19	S1-877-010-250		LEVER,BTN REC
20	S1-877-040-010		PINCH ROLLER ARM
21	S1-877-040-070		PINCH ROLLER ASSY
22	S1-877-010-270		PLATE,SW
23	S1-877-010-310		SPR,ACTUATOR
24	S1-877-190-020		PLATE TIMING
25	S1-877-030-080		SPR,RC
26	S1-877-030-040		P,PLATE
27	S1-877-030-030		PANEL,HEAD
28	S1-877-040-080		PINCH ROLLER ARM SPR
29	S1-877-030-070		SPR,PANEL HEAD
30	S6-401-011-490		SW,LEAF MSW-1541T
31	S1-867-020-040		RPH COLLAR
32	S1-877-033-010		SENSING PLATE ASSY
33	S9-400-312-000		SPR,HEAD
34	S6-201-011-170		HEAD,RP-7442FS-1251
35	S1-877-030-050		ARM MG
36	S6-207-100-020		HEAD E TC-230AN(SL)
37	S1-877-020-010		LEVER,SAFETY REC
38	S1-821-100-700		GEAR,FF
39	S1-877-190-010		ARM RC
40	S1-877-060-020		BACK TENSION SPR
41	S1-877-060-010		S REEL
42	S1-877-053-040		TAKE UP REEL ASSY
43	S1-821-103-4A0		GEAR T ROLLER
44	S1-821-100-460		BACK TENSION SPR
45	S1-877-015-030		T ROLLER GEAR PLATE ASSY
A	S9-817-000-000		SCREW AZIMUTH M2-4.3
B	S9-210-000-000		SCREW M2-5
C	S9-C33-172-030		CAMERA(SPECIAL) SCREW M2-1.7
D	S9-999-000-010		P.WASHER 1.85-3.2-0.2
E	S9-888-000-000		P.WASHER CUT 1.2-3-0.4
F	S9-999-030-010		P.WASHER CUT 1.5-3.2-0.5
G	S9-316-000-000		FH WASHER 2.1-5-0.2

ACCESSORIES/PACKAGE LIST

DESCRIPTIONで判断できない物は "REFERENCE NAME LIST" を参照してください。
If can't understand for Description please kinly refer to "REFERENCE NAME LIST".

REF. NO	PART NO.	KANRI NO.	DESCRIPTION
1	8A-CM3-903-010		IB,U(ESF)A
⚠ 2	87-B30-163-010		AC ADAPTOR,AC-D602U

REFERENCE NAME LIST

ELECTRICAL SECTION

DESCRIPTION	REFERENCE NAME
ANT	ANTENNAS
C-	CHIP
C-CAP	CAP, CHIP
C-CAP TN	CAP, CHIP TANTALUM
C-COIL	COIL, CHIP
C-DI	DIODE, CHIP
C-DIODE	DIODE, CHIP
C-FET	FET, CHIP
C-FOTR	FILTER, CHIP
C-JACK	JACK, CHIP
C-LED	LED, CHIP
C-RES	RES, CHIP
C-SFR	SFR, CHIP
C-SLIDE SW	SLIDE SWITCH, CHIP
C-SW	SWITCH, CHIP
C-TR	TRANSISTOR, CHIP
C-VR	VOLUME, CHIP
C-ZENER	ZENER, CHIP
CAP, CER	CAP, CERA-SOL
CAP, E	CAP, ELECT
CAP, M/F	CAP, FILM
CAP, TC	CAP, CERA-SOL
CAP, TC-U	CAP, CERA-SOL SS
CAP, TN	CAP, TANTALUM
CERA FIL	FILTER, CERAMIC
CF	FILTER, CERAMIC
DL	DELAY LINE
E/CAP	CAP, ELECT
FILT	FILTER
FLTR	FILTER
FUSE RES	RES, FUSE
MOT	MOTOR
P-DIODE	PHOTO DIODE
P-SNSR	PHOTO SENSER
P-TR	PHOTO TRANSISTOR
POLY VARI	VARIABLE CAPACITOR
PPCAP	CAP, PP
PT	POWER TRANSFORMER
PTR, RES	PTR, MELF
RC	REMOTE CONTROLLER
RES NF	RES, NON-FLAMMABLE
RESO	RESONATOR
SHLD	SHIELD
SOL	SOLENOID
SPKR	SPEAKER
SW, LVR	SWITCH, LEVER
SW, RTRY	SWITCH, ROTARY
SW, SL	SWITCH, SLIDE
TC CAP	CAP, CERA-SOL
THMS	THERMISTOR
TR	TRANSISTOR
TRIMMER	CAP, TRIMMER
TUN-CAP	VARIABLE CAPACITOR
VIB, CER	RESONATOR, CERAMIC
VIB, XTAL	RESONATOR, CRYSTAL
VR	VOLUME
ZENER	DIODE, ZENER

MECHANICAL SECTION

DESCRIPTION	REFERENCE NAME
ADHESHIVE	SHEET ADHESHIVE
AZ	AZIMUTH
BAR-ANT	BAR-ANTENNA
BAT	BATTERY
BATT	BATTERY
BRG	BEARING
BTN	BUTTON
CAB	CABINET
CASS	CASSETTE
CHAS	CHASSIS
CLR	COLLAR
CONT	CONTROL
CRSR	CURSOR
CU	CUSHION
CUSH	CUSHION
DIR	DIRECTION
DUBB	DUBBING
FL	FRONT LOADING
FLY-WHL	FLYWHEEL
FR	FRONT
FUN	FUNCTION
G-CU	G-CUSHION
HDL	HANDOL
HIMERON	CLOTH
HINGE, BAT	HINGE, BATTERY
HLDR	HOLDER
HT-SINK	HEAT SINK
IB	INSTRUCTION BOOKLET
IDLE	IDLER
IND, L-R	INDICATOR, L-R
KEY, CONT	KEY, CONTROL
KEY, PRGM	KEY, PROGRAM
KNOB, SL	KNOB, SLIDE
LBL	LABEL
LID, BATT	LID, BATTERY
LID, CASS	LID, CASSETTE
LVR	LEVER
P-SP	P-SPRING
PANEL, CONT	PANEL, CONTROL
PANEL, FR	PANEL, FRONT
PRGM	PROGRAM
PULLY, LOAD MO	PULLY, LOAD MOTOR
RBN	RIBBON
S-	SPECIAL
SEG	SEGMENT
SH	SHEET
SHLD-SH	SHIELD-SHEET
SL	SLIDE
SP	SPRING
SP-SCREW	SPECIAL-SCREW
SPACER, BAT	SPACER, BATTERY
SPR	SPRING
SPR-P	P-SPRING
SPR-PC-PUSH	P-SPRING, C-PUSH
T-SP	T-SPRING
TERM	TERMINAL
TRIG	TRIGGER
TUN	TUNING
VOL	VOLUME
W	WASHER
WHL	WHEEL
WORM-WHL	WORM-WHEEL

アイワ株式会社 〒110-8710 東京都台東区池之端1-2-11 ☎03(3827)3111 (代表)
AIWA CO.,LTD. 2-11, IKENOHATA 1-CHOME, TAITO-KU, TOKYO 110-8710, JAPAN TEL:03 (3827) 3111

931196
Printed in Singapore